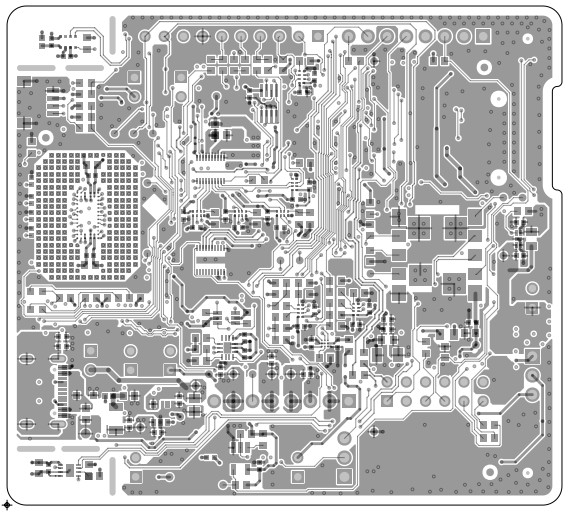

Infineon Technologies AG
Am Campeon 1-15
85579 NEUBIBERG - GERMANY

PROJECT: XENSIV™ SENSOR SHIELD			
DRAWN BY: ECAD			
LAYER: TOP SIDE			
DWG NO: 600-60700-01	REV: 03	DATE: 23/07/2024	

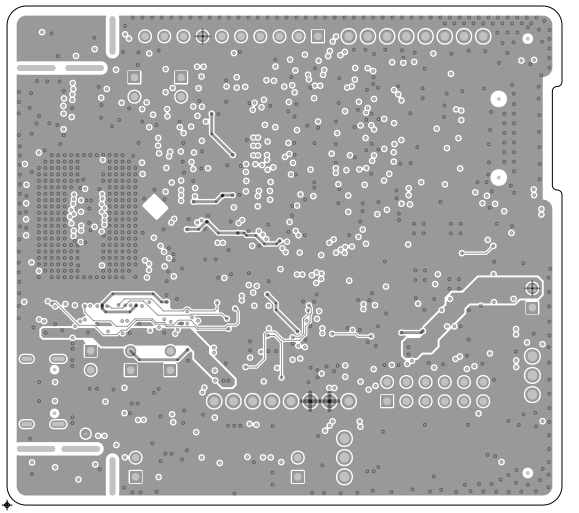

Infineon Technologies AG
Am Campeon 1-15
85579 NEUBIBERG - GERMANY

PROJECT:	XENSIV™ SENSOR SHIELD		
DRAWN BY:	ECAD		
LAYER:	L02 - GND		
DWG NO: 600-60700-01		REV: 03	DATE: 23/07/2024

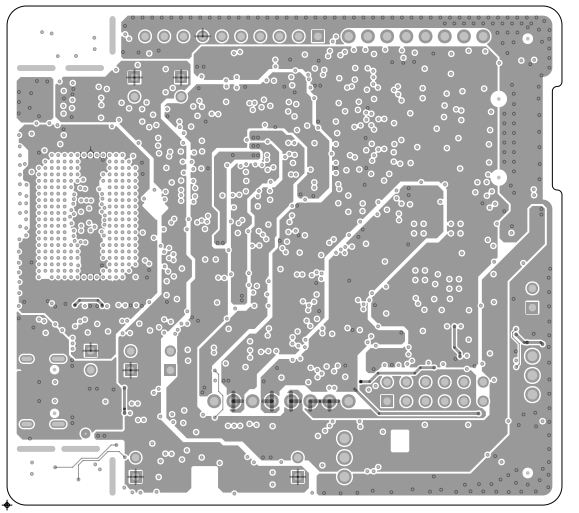

Infineon Technologies AG
Am Campeon 1-15
85579 NEUBIBERG - GERMANY

PROJECT:	XENSIV™ SENSOR SHIELD		
DRAWN BY:	ECAD		
LAYER:	L03 - PWR		
DWG NO: 600-60700-01		REV: 03	DATE: 23/07/2024

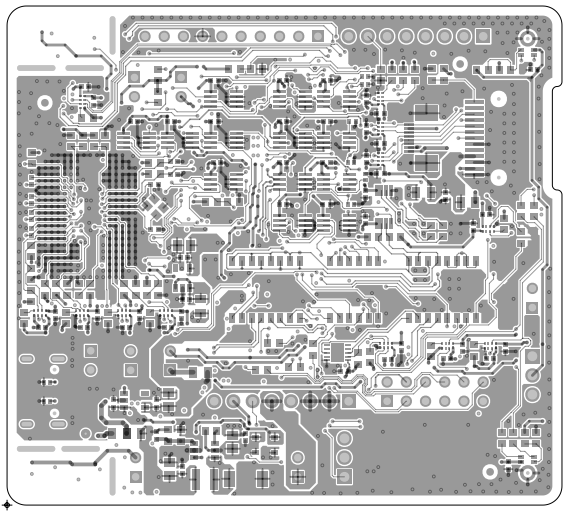

Infineon Technologies AG
Am Campeon 1-15
85579 NEUBIBERG - GERMANY

PROJECT:	XENSIV™ SENSOR SHIELD		
DRAWN BY:	ECAD		
LAYER:	BOTTOM SIDE		
DWG NO: 600-60700-01		REV: 03	DATE: 23/07/2024

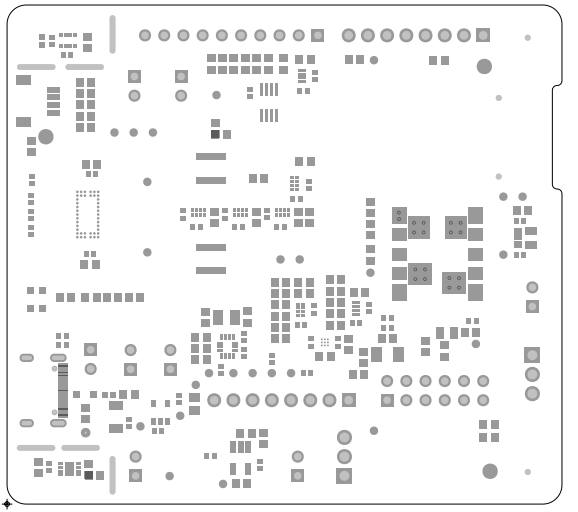

Infineon Technologies AG
Am Campeon 1-15
85579 NEUBIBERG - GERMANY

PROJECT:	XENSIV™ SENSOR SHIELD		
DRAWN BY:	ECAD		
LAYER:	SOLDERMASK TOP		
DWG NO: 600-60700-01		REV: 03	DATE: 23/07/2024

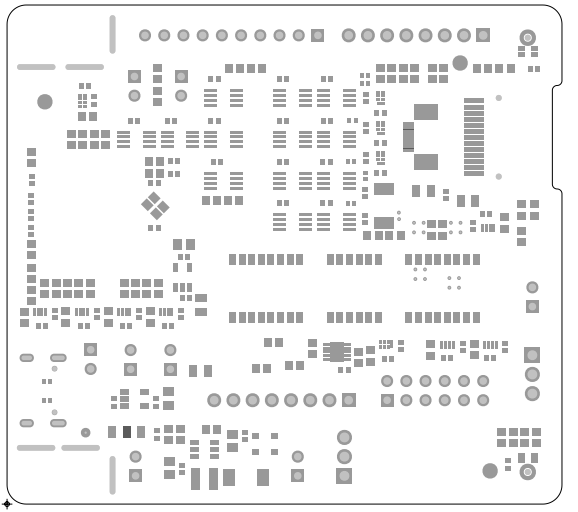

Infineon Technologies AG Am Campeon 1-15 85579 NEUBIBERG - GERMANY	PROJECT: XENSIV™ SENSOR SHIELD		
	DRAWN BY: ECAD		
	LAYER: SOLDERMASK BOTTOM		
	DWG NO: 600-60700-01	REV: 03	DATE: 23/07/2024

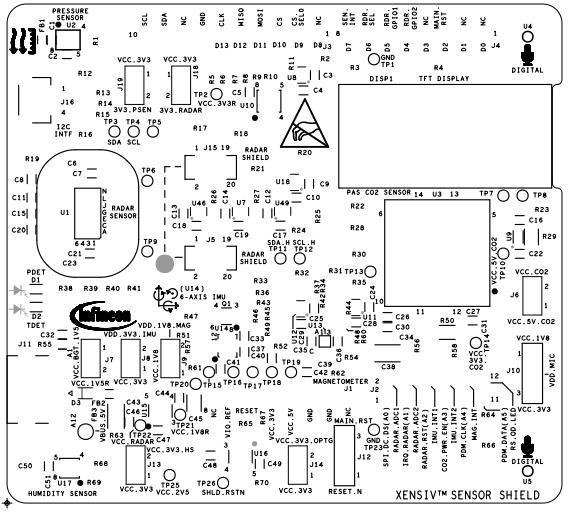

Infineon Technologies AG Am Campeon 1-15 85579 NEUBIBERG - GERMANY	PROJECT: XENSIV™ SENSOR SHIELD		
	DRAWN BY: ECAD		
	LAYER: SILKSCREEN TOP		
	DWG NO: 600-60700-01	REV: 03	DATE: 23/07/2024

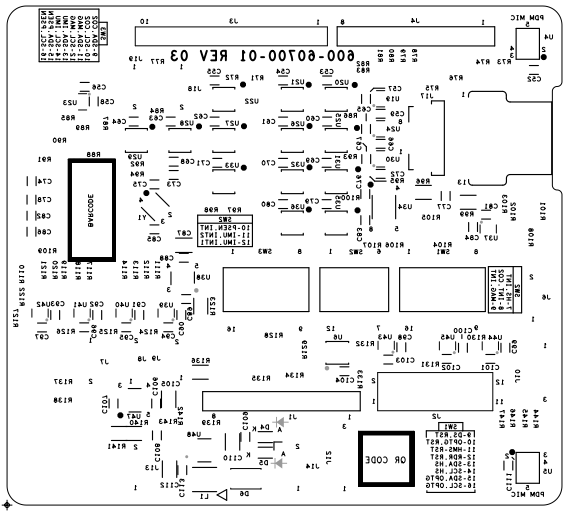

Infineon Technologies AG Am Campeon 1-15 85579 NEUBIBERG - GERMANY	PROJECT: XENSIV™ SENSOR SHIELD		
	DRAWN BY: ECAD		
	LAYER: SILKSCREEN BOTTOM		
	DWG NO: 600-60700-01	REV: 03	DATE: 23/07/2024

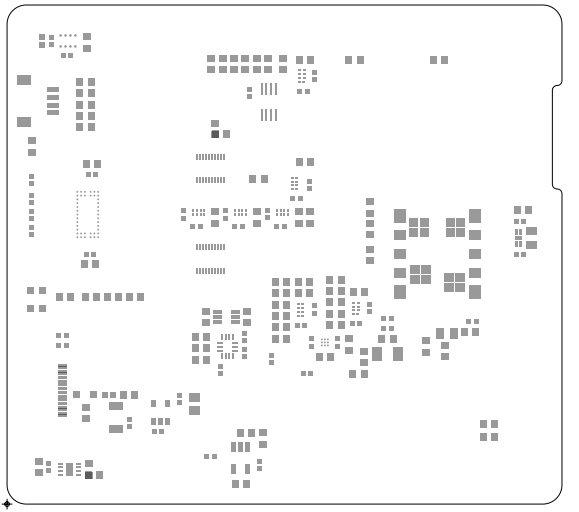

Infineon Technologies AG
Am Campeon 1-15
85579 NEUBIBERG - GERMANY

PROJECT:	XENSIV™ SENSOR SHIELD		
DRAWN BY:	ECAD		
LAYER:	SOLDERPASTE TOP		
DWG NO: 600-60700-01		REV: 03	DATE: 23/07/2024

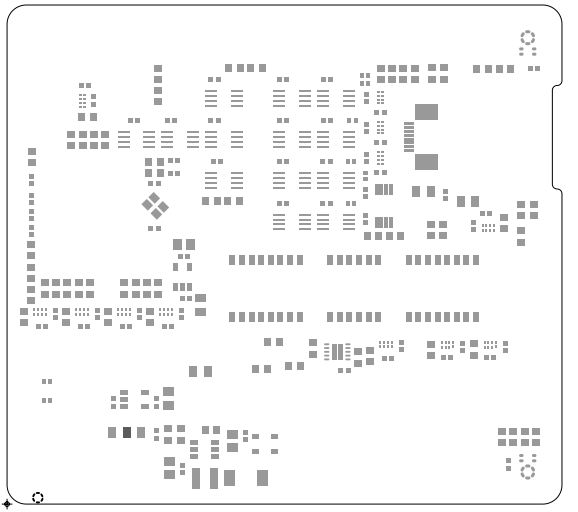

Infineon Technologies AG
Am Campeon 1-15
85579 NEUBIBERG - GERMANY

PROJECT:	XENSIV™ SENSOR SHIELD		
DRAWN BY:	ECAD		
LAYER:	SOLDERPASTE BOTTOM		
DWG NO: 600-60700-01		REV: 03	DATE: 23/07/2024